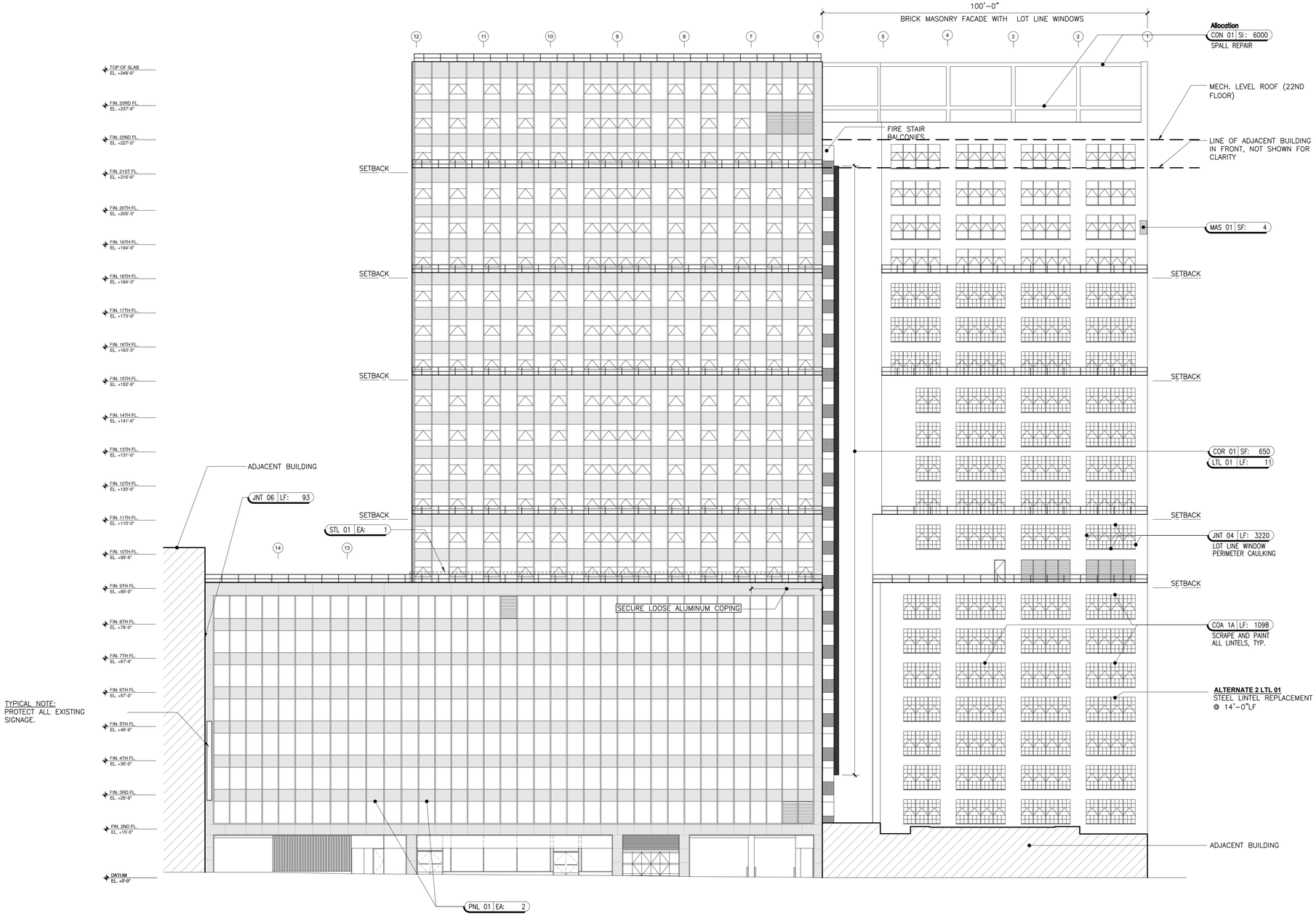

02 - NORTH ELEVATION

SCALE: 1/16" = 1'-0"

SUPER STRUCTURES + ENGINEERS ARCHITECTS

32 AVENUE OF THE AMERICAS
NEW YORK, NY 10013
TEL 212 505 1133
FAX 212 505 1726

DATE ISSUE/REVISION

FACADE RESTORATION

SUPER NO.

DRAWN BY CHECKED BY

SHEET TITLE

NORTH ELEVATION

SHEET NO.

A-04

PLOT TIME: 7/27/2016 4:39 PM FILE NAME: Q:\(W) Promo_RFP\Website (development)\superstructures.com\2016 Site\Project Drawings for PDF Uploads\3681103 (135 West 50th Street)rvt\A-04 NORTH ELEVATION.dwg COPYRIGHT 2006 BY SUPERSTRUCTURES. NO PART OF THIS SHEET MAY BE REPRODUCED BY MECHANICAL OR ELECTRONIC MEANS, OR BY ANY INFORMATION STORAGE AND RETRIEVAL SYSTEM, WITHOUT PERMISSION IN WRITING FROM SUPERSTRUCTURES.

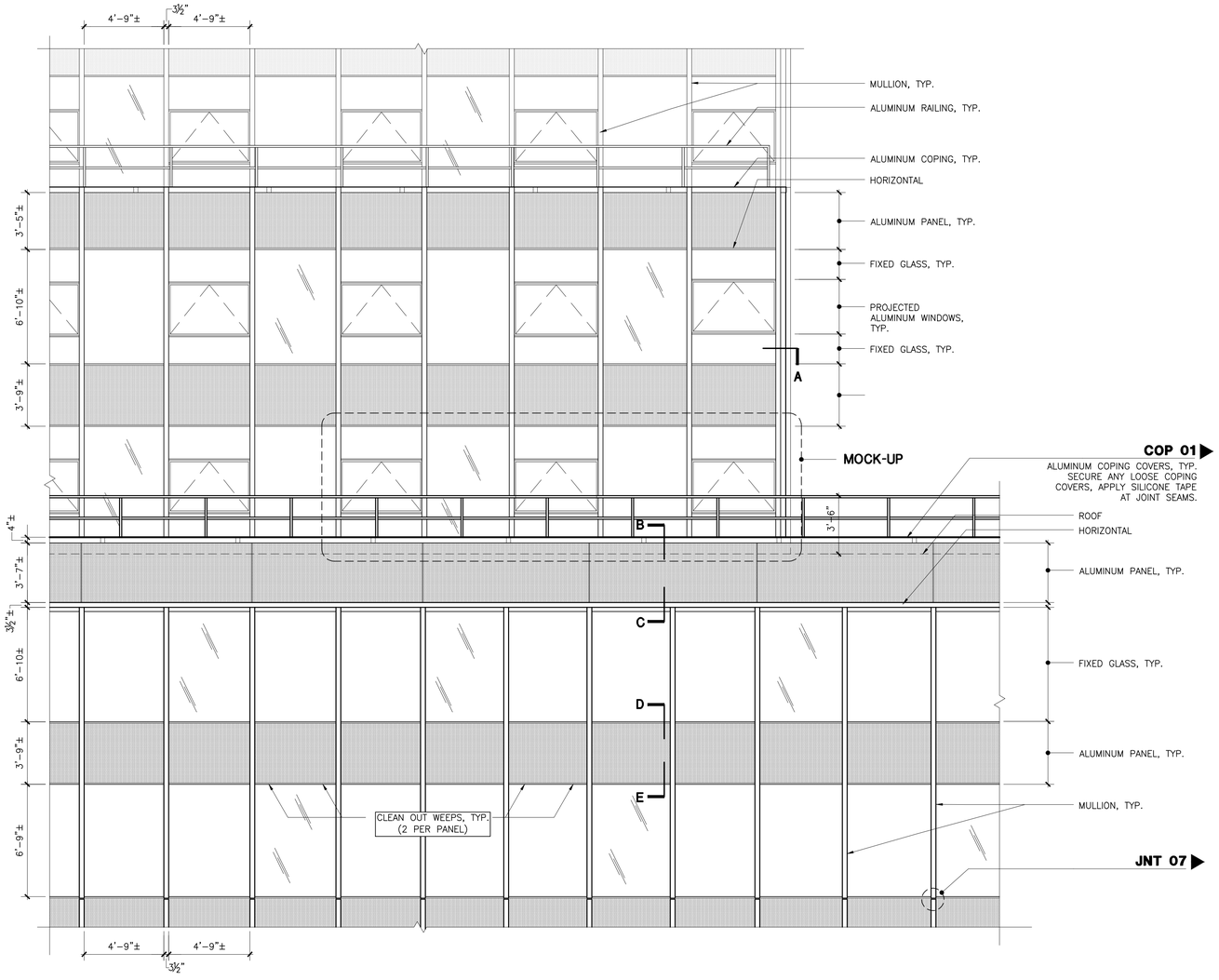

01 - PARTIAL KEY ELEVATION

SOUTH ELEVATION

SCALE: 1/4" = 1'-0"

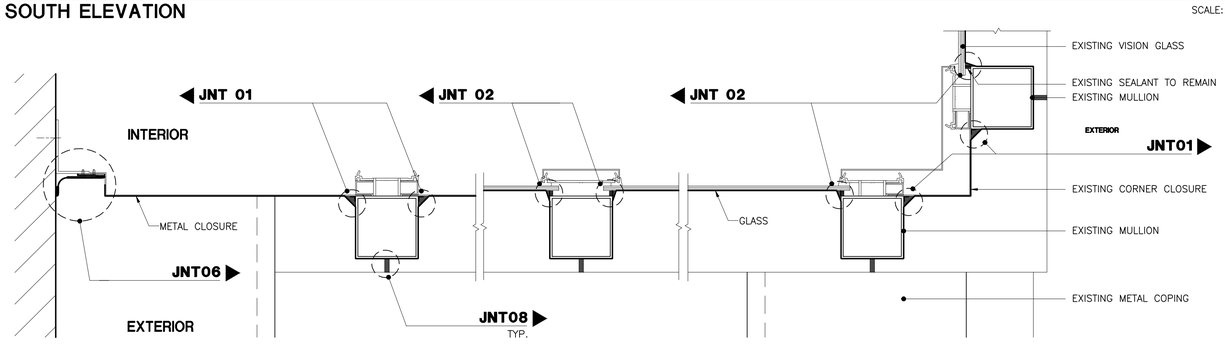

TYPICAL JOINT AT ADJACENT PROPERTY

TYPICAL MULLION

TYPICAL CORNER DETAIL

PARTIAL KEY PLAN AT "A"

SCALE: 3" = 1'-0"

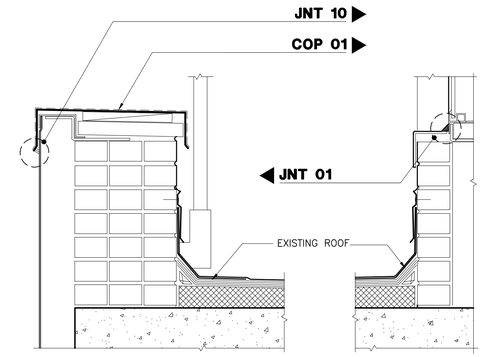

SECTION B

TYPICAL SETBACK

SCALE: 1 1/2"" = 1'-0"

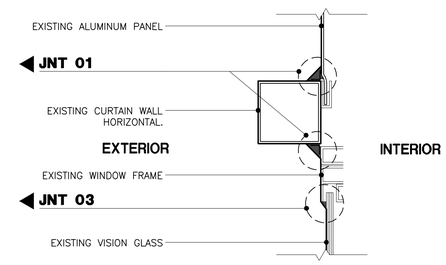

SECTION C

SCALE: 3" = 1'-0"

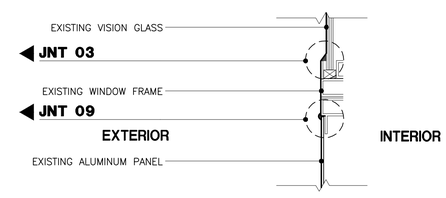

SECTION D

SCALE: 3" = 1'-0"

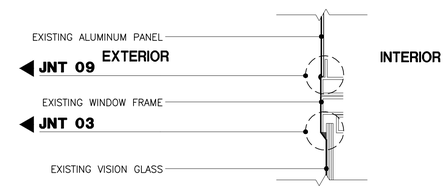

SECTION E

SCALE: 3" = 1'-0"

SUPER STRUCTURES + ENGINEERS ARCHITECTS

32 AVENUE OF THE AMERICAS
NEW YORK, NY 10013
TEL 212 505 1133
FAX 212 505 1726

DATE ISSUE/REVISION

FACADE RESTORATION

SUPER NO.

DRAWN BY CHECKED BY

SHEET TITLE

KEY ELEVATION & SECTION

SHEET NO.

A-07

COPYRIGHT 2006 BY SUPERSTRUCTURES. NO PART OF THIS SHEET MAY BE REPRODUCED BY MECHANICAL OR ELECTRONIC MEANS, OR BY ANY INFORMATION STORAGE AND RETRIEVAL SYSTEM, WITHOUT PERMISSION IN WRITING FROM SUPERSTRUCTURES.

PLOT TIME: 7/27/2016 4:39 PM FILE NAME: G:\Vi Promo_JEFV\Website (Development)\superstructures.com\2016 Site\Project Drawings for PDF Uploads\3681803 (135 West 50th Street)\v\A-07 KEY ELEVATION.dwg

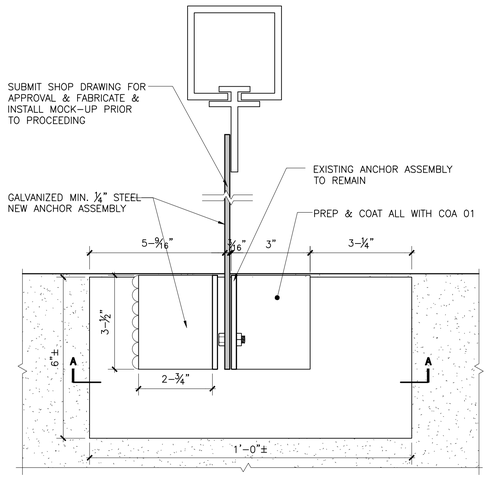

PLAN

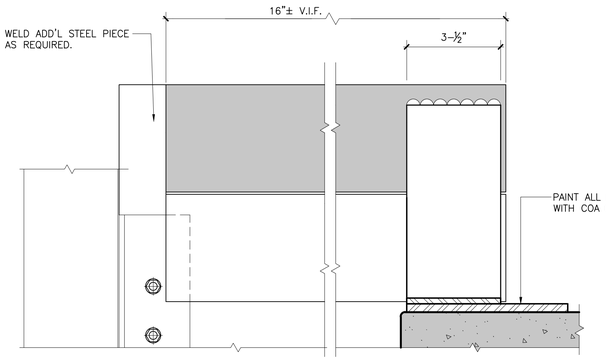

SIDE ELEVATION

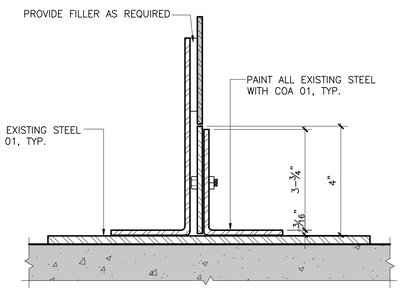

ELEVATION A-A

ANC 01
ANCHORS AT LOUVERS

N.T.S.

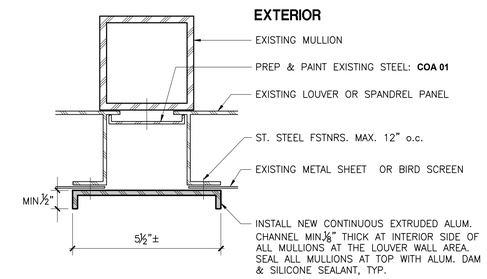

PNL 02
MULLION COVER AT INTERIOR

N.T.S.

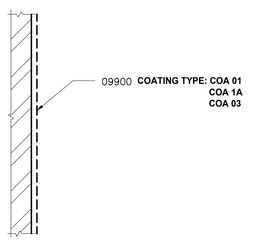

COA 01/1A/03
STEEL COATING

NTS

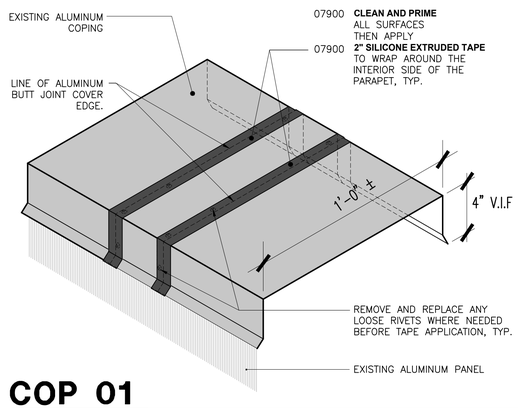

COP 01
EXTRUDED SILICONE TAPE (2" WIDE)

SCALE: N.T.S.

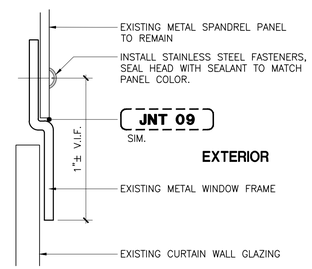

SECTION - A

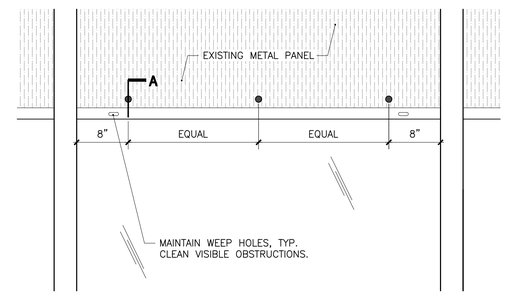

EXTERIOR

ELEVATION

PNL 01
SPANDREL PANEL REPAIR

N.T.S.

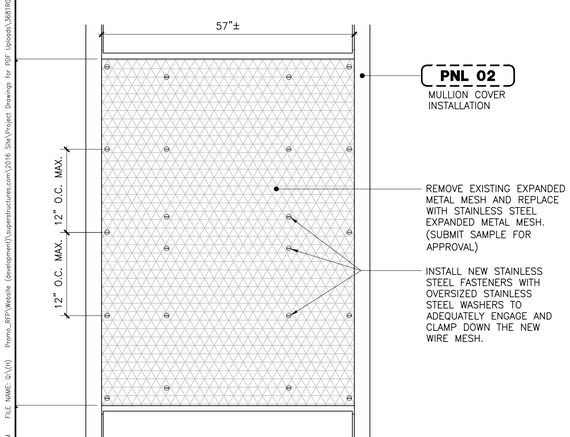

SCR 01
SCREEN REPLACEMET AT LOUVERS

N.T.S.

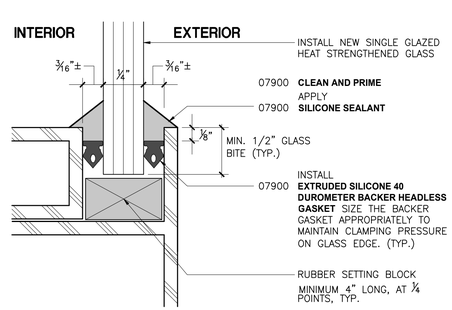

GLZ 01
CURTAIN WALL GLASS REPLACEMENT

N.T.S.

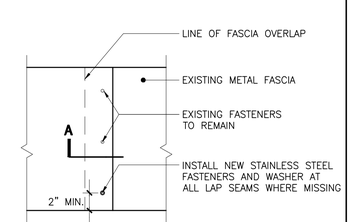

ELEVATION

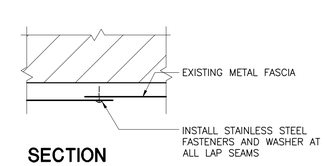

SECTION

FLA 01
METAL FASCIA REFASTENING

SUPER STRUCTURES + ENGINEERS ARCHITECTS

32 AVENUE OF THE AMERICAS
NEW YORK, NY 10013
TEL 212 505 1133
FAX 212 505 1726

DATE	ISSUE/REVISION

FACADE RESTORATION

SUPER NO.

DRAWN BY CHECKED BY

SHEET TITLE

RESTORATION ASSEMBLY DETAILS

SHEET NO.

A-08

PLOT TIME: 7/27/2016 4:39 PM FILE NAME: Q:\(V) Promo_BFP\Website (development)\superstructures.com\2016 Site\Project Drawings for PDF Upload\J681802 (135 West 50th Street)v4\V-08 RESTORATION ASSEMBLY DETAILS.dwg COPYRIGHT 2006 BY SUPERSTRUCTURES, NO PART OF THIS SHEET MAY BE REPRODUCED BY MECHANICAL OR ELECTRONIC MEANS, OR BY ANY INFORMATION STORAGE AND RETRIEVAL SYSTEM, WITHOUT PERMISSION IN WRITING FROM SUPERSTRUCTURES.

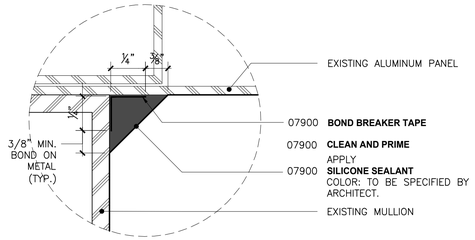

JNT 01
ALUMINUM TO ALUMINUM

SCALE: N.T.S.

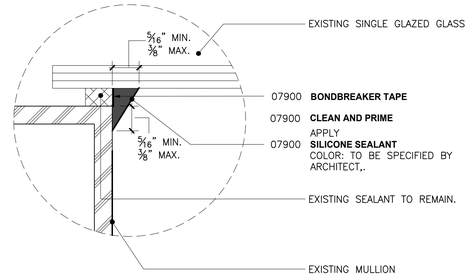

JNT 02
ALUMINUM TO GLASS

SCALE: N.T.S.

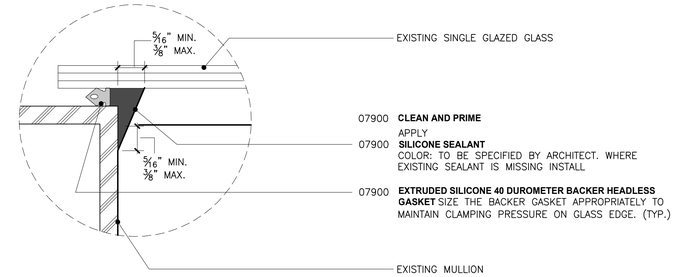

JNT 02A
ALUMINUM TO GLASS W/GASKET

SCALE: N.T.S.

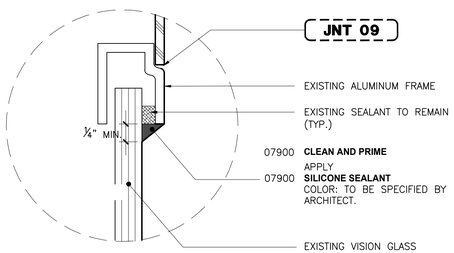

JNT 03
ALUMINUM TO GLASS

SCALE: N.T.S.

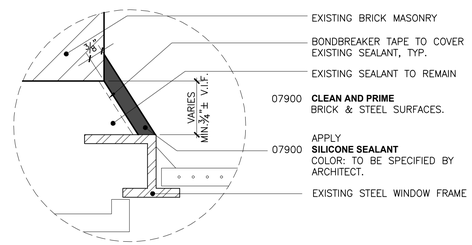

JNT 04
MASONRY TO STEEL

SCALE: N.T.S.

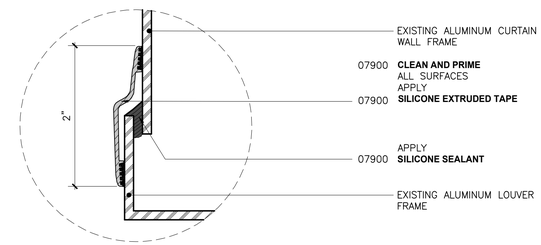

JNT 05
EXTRUDED SILICONE TAPE (2" WIDE)

SCALE: N.T.S.

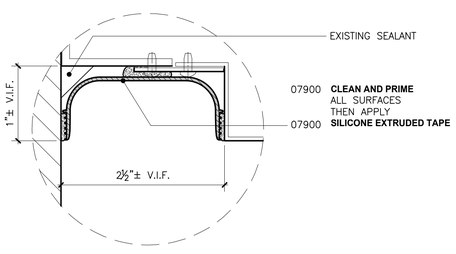

JNT 06
SILICONE EXTRUDED TAPE (4" WIDE)

SCALE: N.T.S.

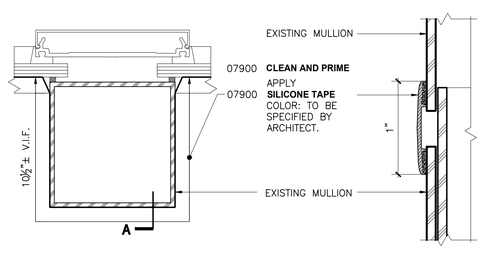

TYPICAL MULLION (PLAN)

SECTION - A

JNT 07
MULLION SPLICE JOINT

SCALE: N.T.S.

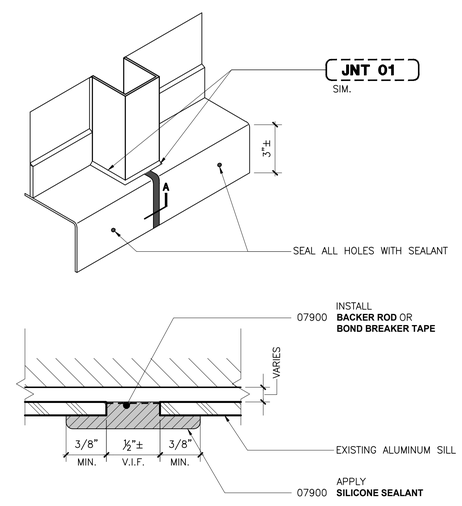

SECTION - A

JNT 08
SILL SPLICE JOINT

SCALE: N.T.S.

SUPER STRUCTURES + ENGINEERS ARCHITECTS

32 AVENUE OF THE AMERICAS
NEW YORK, NY 10013
TEL 212 505 1133
FAX 212 505 1726

DATE ISSUE/REVISION

FACADE RESTORATION

SUPER NO.

DRAWN BY CHECKED BY

SHEET TITLE

JOINT SEALANT DETAILS

SHEET NO.

A-09

COPYRIGHT 2006 BY SUPERSTRUCTURES. NO PART OF THIS SHEET MAY BE REPRODUCED BY MECHANICAL OR ELECTRONIC MEANS, OR BY ANY INFORMATION STORAGE AND RETRIEVAL SYSTEM, WITHOUT PERMISSION IN WRITING FROM SUPERSTRUCTURES.

PLOT TIME: 7/27/2016 4:40 PM FILE NAME: G:\(V) Promo_RFP\Website (Development)\superstructures.com\2016 Site\Project Drawings for PDF Uploads\365 W50 (135 West 50th Street)\A-09 JOINT DETAILS.dwg

PLOT TIME: 7/27/2016 4:40 PM FILE NAME: G:\(X) Promo_RFP\Website (development)\superstructures.com\2016 Site\Project Drawings for PDF Uploads\3681803 (135 West 50th Street)\v\A-12 RESTORATION ASSEMBLY DETAILS.dwg COPYRIGHT 2006 BY SUPERSTRUCTURES. NO PART OF THIS SHEET MAY BE REPRODUCED BY MECHANICAL OR ELECTRONIC MEANS, OR BY ANY INFORMATION STORAGE AND RETRIEVAL SYSTEM, WITHOUT PERMISSION IN WRITING FROM SUPERSTRUCTURES.

Xref G:\RAD Catalog\Details\ANC_Z10_03.dwg

▶A \LTL 02
FLASHING ANCHORAGE

FULL SCALE

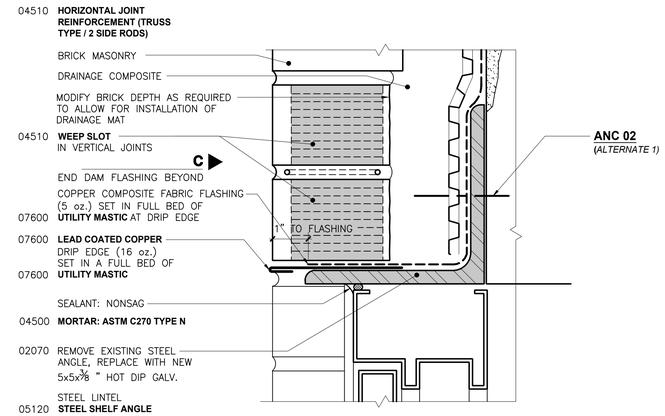

SECTION AT WINDOW HEAD

▶B \LTL 02
LINTEL FLASHING

SCALE: 6" = 1'-0"

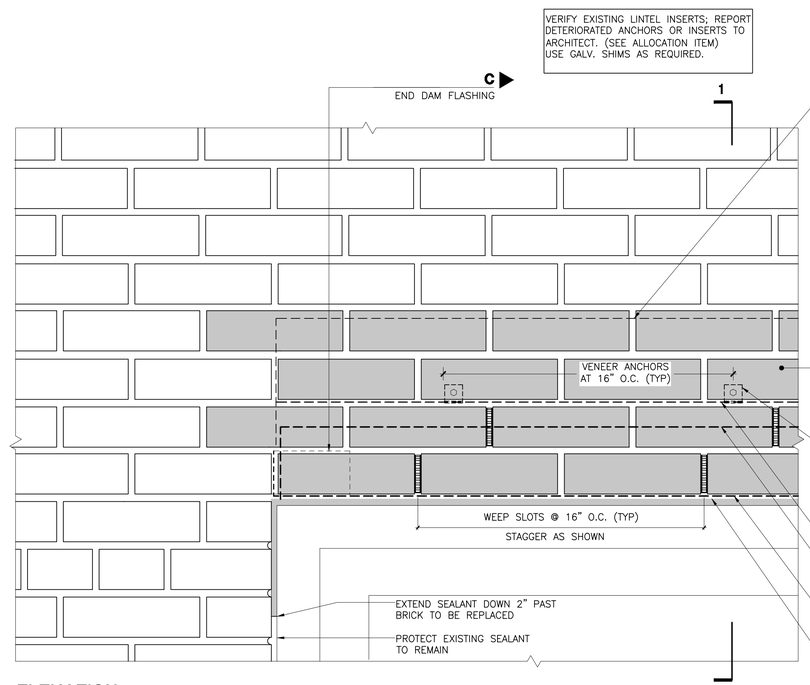

ELEVATION

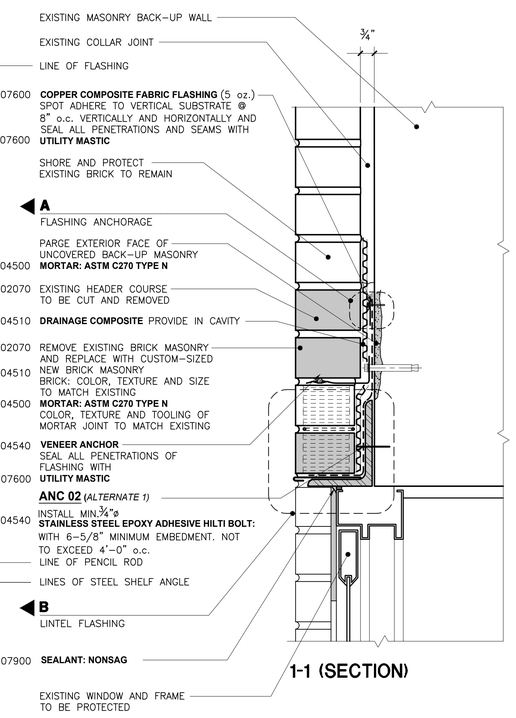

1-1 (SECTION)

▶C \LTL 02
END DAM FLASHING

SCALE: 3" = 1'-0"

LTL 01 (ALTERNATE 2)
LINTEL REPLACEMENT: AT LOT LINES

SCALE: 3" = 1'-0"

SUPER STRUCTURES + ENGINEERS ARCHITECTS

32 AVENUE OF THE AMERICAS
NEW YORK, NY 10013
TEL 212 505 1133
FAX 212 505 1726

DATE	ISSUE/REVISION

FACADE RESTORATION

SUPER NO.

DRAWN BY CHECKED BY

SHEET TITLE

RESTORATION ASSEMBLY DETAILS

SHEET NO.

A-12